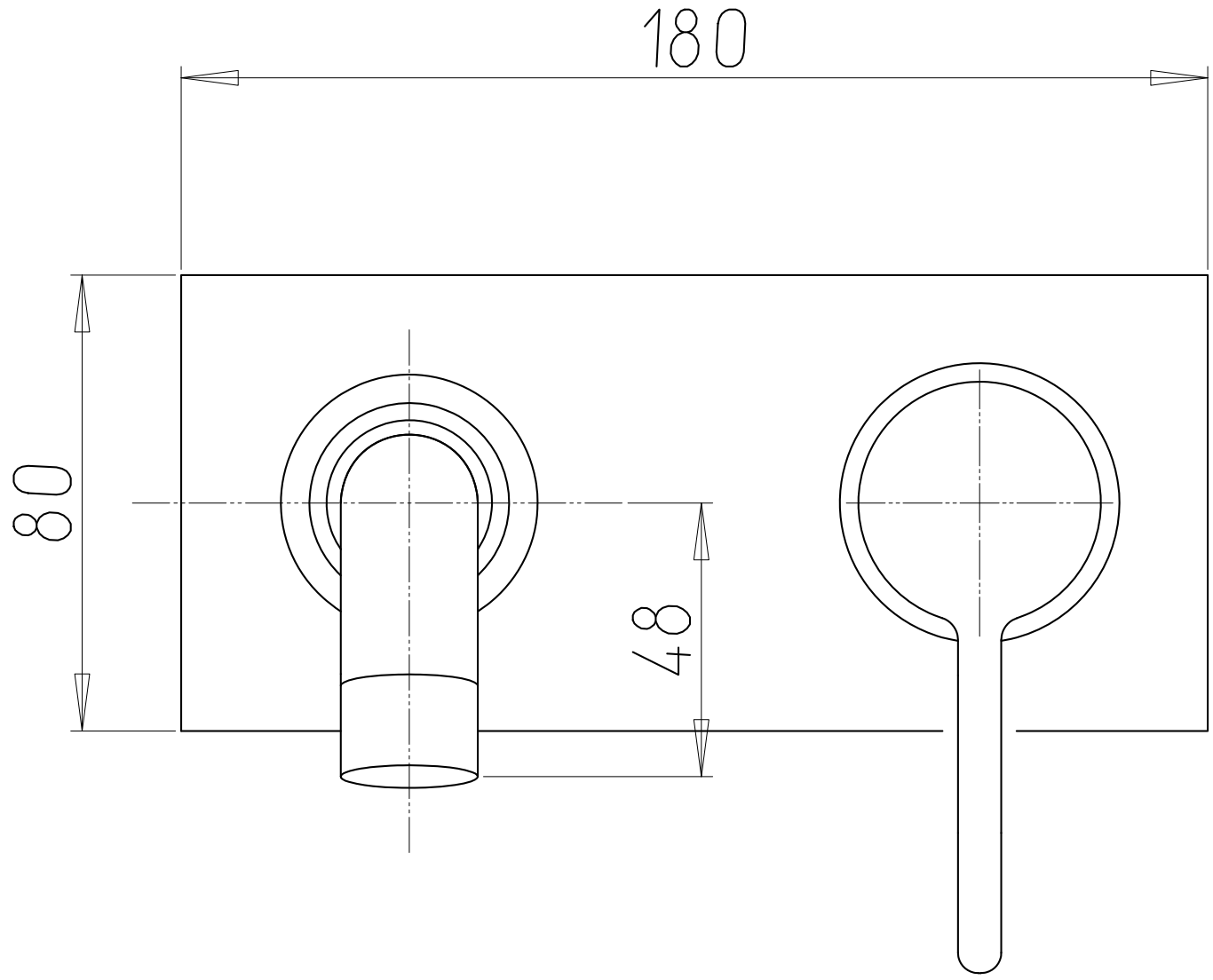
180
80
48

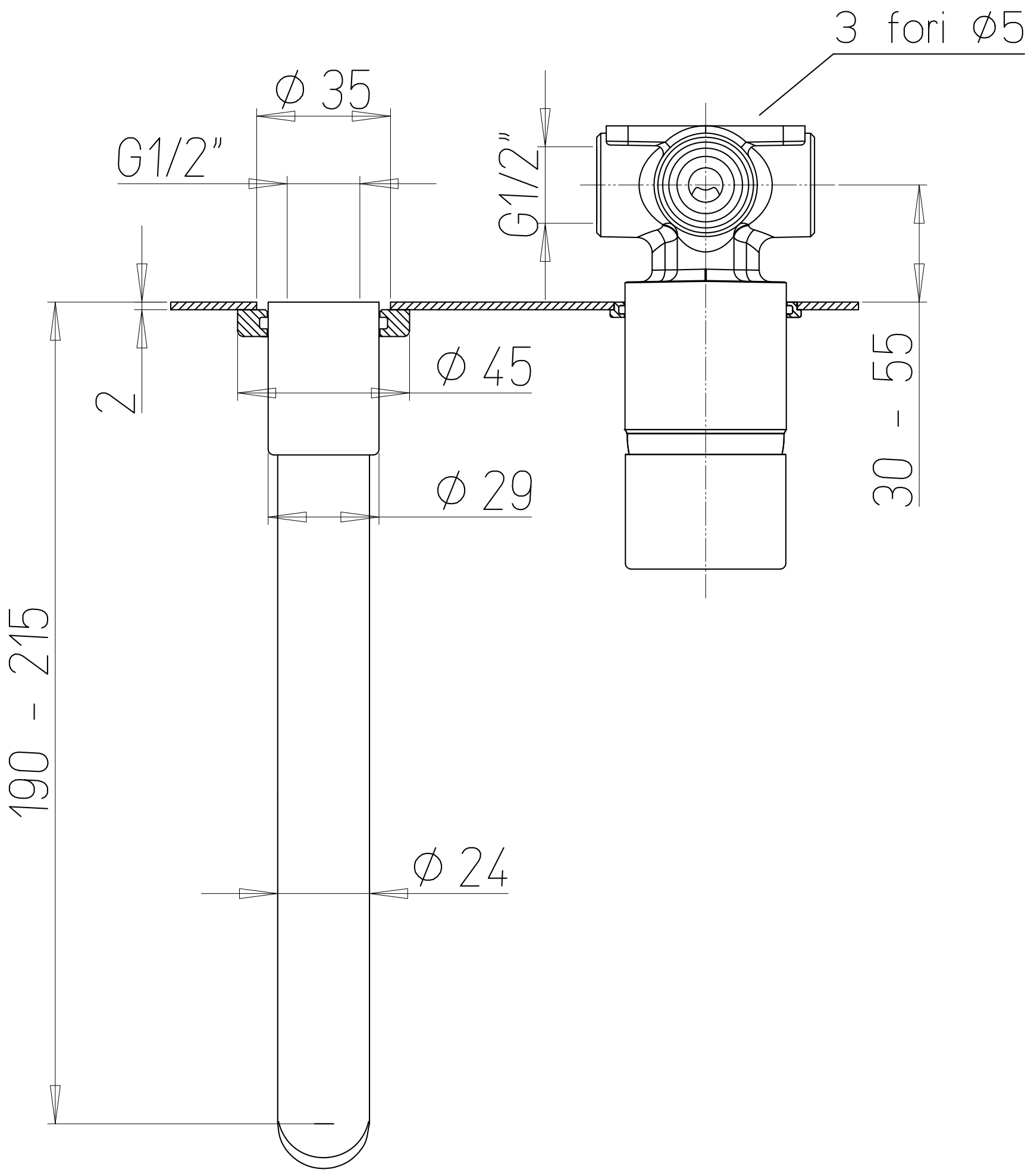
3 fori ∅5
∅ 35
G1/2"
G1/2"
2
∅ 45
30 - 55
∅ 29
190 - 215
∅ 24