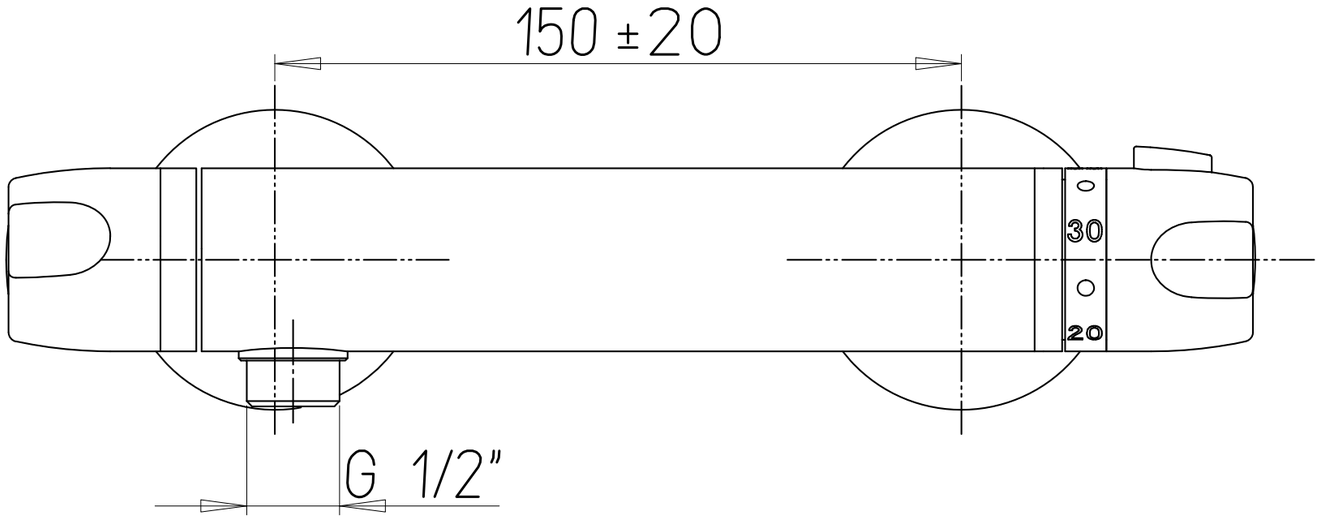
150 ±20
30
20
G 1/2"

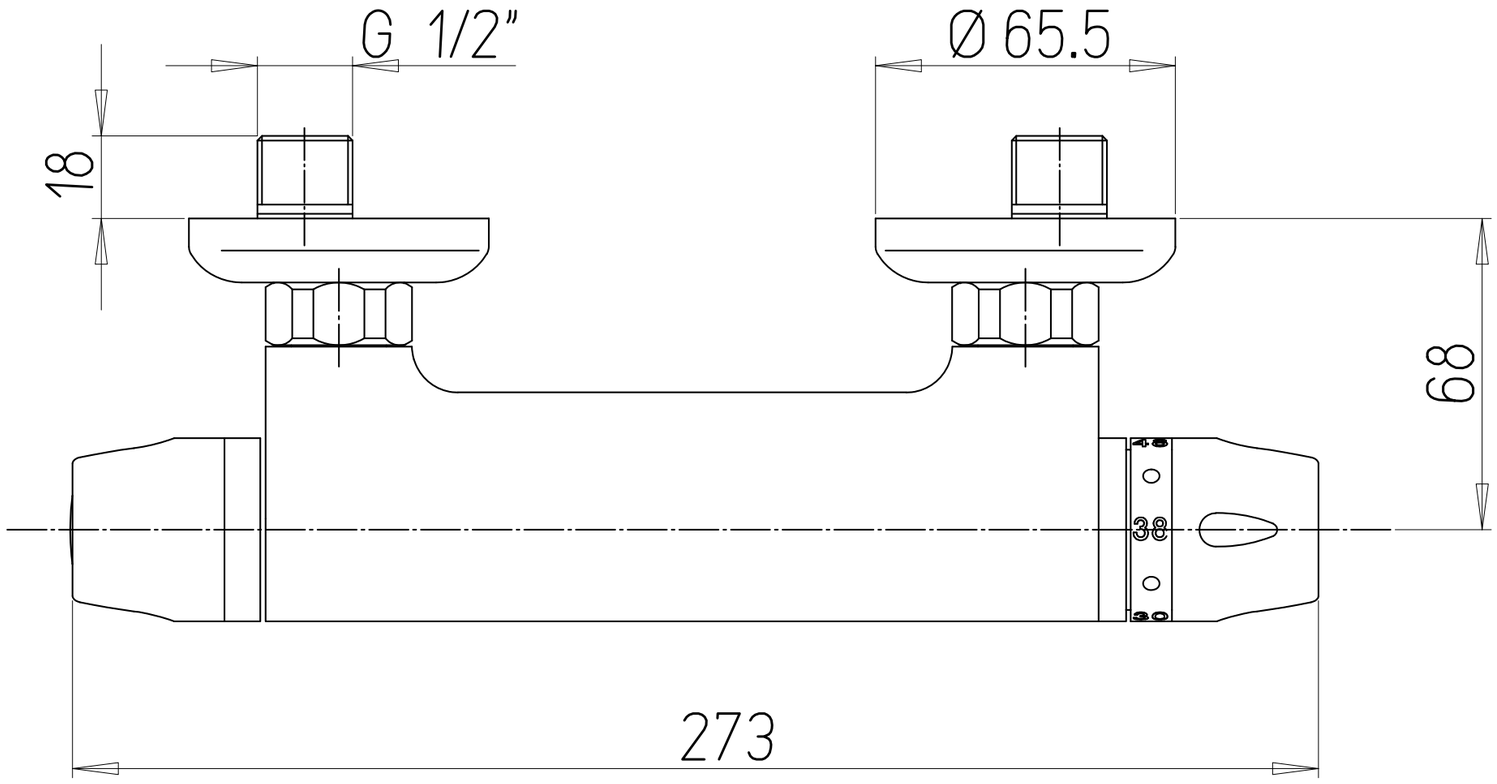
G 1/2"
Ø 65.5
18
68
40
38
30
273